RIGID LED

LASER™ / LEON™

LED SIMULATED NEON

High Intensity LED Accent Lighting

BENEFITS

- Super bright LEDs get you noticed
- USA manufactured housing
- Up to 85% more energy efficient than neon
- Long Life - 70,000+ hrs (Colors), 50,000+ hrs (White)
- Safe UL Class 2, 24 VDC (120-277 VAC input)
- Straight lines, rigid construction, no sagging
- Seamless color, no light interruptions
- Pre-formed radii when required, custom built for a perfect fit
- Easy ordering, kit includes all required parts
- Cut to length on-site for easy installation

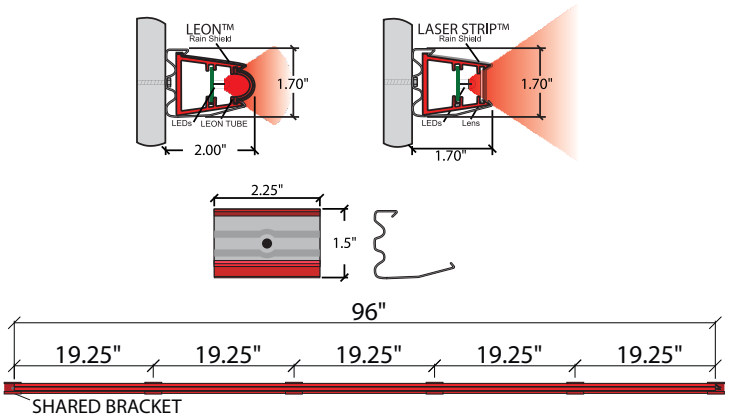

7-YEAR WARRANTY

BEST FOR: Hotels, petroleum canopies, restaurants, exterior accent/border lighting, landscaping, pathways, tunnel, bridge lighting

DETAILS

Input	120-277 VAC
Output	24 VDC (Philips Advance)
Max. Load Footage	64 Lineal ft. 20L 48 Lineal ft. 30L & 24L
Watts per Foot	< 1.09 (Varies by Product)
Dimming Capable	Yes
Bending Parameters	Factory bends available
Limited Warranty Terms	7 Years
Materials	PVC, UV and impact resistant
Dimensions	2.00 x 1.70
Certification	cULus E174914

SPECIFICATIONS

Part No./ Color	Footage	Wattage per foot	Lumens per foot	Number of LEDs/ft.
Blue	48	1.46	-	24
Green	48	1.50	-	24
White	48	1.35	168	24
Red	64	0.91	-	20
Orange	64	0.77	-	20
Amber	64	0.70	-	20
Red	48	1.19	-	30
Orange	48	1.13	-	30

*Rigid systems based on Philips Advance 100W, 24V Output LED Driver LEDINTA0024V41FO

LEKTRON
Branding Solutions

918.622.4978
www.lektroninc.com
sales@lektroninc.com